ACTA CHEMICA SCANDINAVICA 12 (1958) 823—832

The Quenching of the Long-lived Fluorescence of Biacetyl in Solution

HANS L. J. BÄCKSTRÖM and KJELL SANDROS

Institutionen för fysikalisk kemi, Chalmers Tekniska Högskola, Göteborg, Sweden

The quenching effect of different types of compounds on the long-lived fluorescence of biacetyl has been studied in solution at 20°C by measuring fluorescence decay rates. The results are in accord with the conclusion of Lewis and Kasha that the emitting state of biacetyl is a triplet or biradical state. Photochemical reactions of carbonyl compounds indicate that the structure of the biradical may be written as

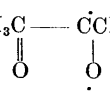

$CH_3C(=O)-\dot{C}(\dot{O})CH_3$ and that, due to the odd electron on oxygen, it has the power of abstracting H-atoms from colliding molecules.

Two different classes of quenchers are distinguished. The first class comprises substances having a loosely bound hydrogen atom, such as primary and secondary amines, phenols, aldehydes, and alcohols. In this case the quenching mechanism is assumed to consist in a photochemical reaction of the kind indicated. The second class of quenchers comprises unsaturated and aromatic compounds, the strongest quenchers of this type being polynuclear hydrocarbons. Here the quenching mechanism is assumed to be an energy transfer, causing a triplet → singlet transition in the biacetyl molecule and the reverse transition in the quencher. This assumption is in accord with known values of triplet state energies, and is further supported by the results of preliminary photochemical experiments, showing that irradiation of a benzene solution of biacetyl and anthracene gives rise to a photosensitized formation of dianthracene. The quantum efficiency under the conditions employed is of the order of 1 %, increasing with increasing light intensity.

When solid solutions of unsaturated compounds are irradiated with ultraviolet light at liquid air temperatures, two kinds of photo-luminescence may be observed: normal fluorescence, and a more long-lived luminescence with an entirely different spectrum, displaced toward longer wavelengths. Under suitable experimental conditions the latter emission may be observed as phosphorescence. According to Lewis and Kasha [1], the phosphorescent state may be identified with the triplet or biradical state of the molecule. In accord-

ance with the selection rule prohibiting intercombinations between levels of different multiplicity, the radiative return from the triplet to the ground (singlet) level is a slow process.

In the case of most substances, warming the solution leads to a gradual disappearance of the long-lived emission as the fluidity of the solvent increases. A few exceptions are known, however, where it may be observed at ordinary temperatures [2]. In these cases the triplet state of the molecule must possess exceptional stability toward collisional deactivation. The most notable of these cases is that of biacetyl. The so-called "delayed fluorescense" of biacetyl has been studied extensively in the vapour state and to some extent also in water solution [3]. Its quenching by O_2 has been studied quantitatively in the vapour state [3]. The same phenomenon has been observed in water solution but no quantitative data have been reported.

The present study of the quenching effect of different types of compounds on the long-lived fluorescence of biacetyl in solution [4] was undertaken with the aim of obtaining information on the chemistry of the triplet state, about which very little is known [5].

The paper also gives some preliminary results of photochemical experiments on solutions of biacetyl and anthracene.

EXPERIMENTAL

In some preliminary experiments, quenching was studied by measuring the intensity of fluorescence under constant conditions of illumination. The final experiments, however, were made by studying the effect of quenchers on the rate of decay of fluorescence.

Apparatus

The experimental arrangement for measuring fluorescence decay rates is shown schematically in Fig. 1. Light from a single condenser discharge through the flash tube *a* passed through filter combination *c* before entering the solution through one of the end

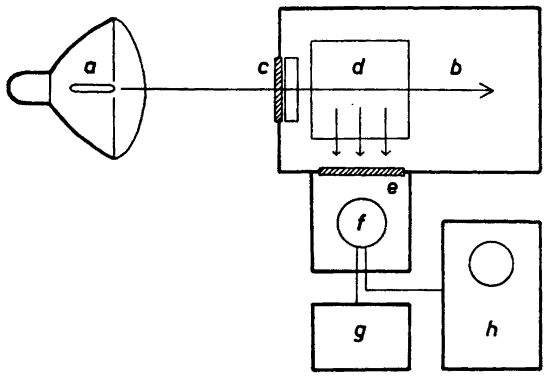

Fig. 1. Schematic diagram of apparatus for measuring fluorescence decay rates. (a) Flash tube. (b) Light-tight box. (c) Filter combination, consisting of 4 mm Chance glass OB1 + 1 cm 0.5 M sodium nitrite solution. (d) Cylindrical fluorescence cell. (e) Light filter (Chance OY3, 4 mm). (f) Photomultiplier tube. (g) Stabilized adjustable voltage supply. (h) Oscilloscope.

plates of the cylindrical fluorescence cell *d*. This filter combination confined the exciting light to the wavelength region 3 800 – 5 000 Å. The cell had a diameter of 4 cm and a length of 4 cm. Fluorescence radiation, perpendicular to the exciting light, passed through filter *e* to remove scattered incident light before inpinging on the photomultiplier tube *f*. Filter *e* removed all wavelengths below 5 000 Å. The long-wave fluorescence of biacetyl lies mainly in the region 5 000 – 6 000 Å. The voltage applied to the photomultiplier tube (RCA 931A) was varied between 600 and 900 V. About 700 V was generally found suitable. The output of the multiplier tube was fed into a resistance of 20 000 ohms and the voltage developed across the resistance applied to the vertical deflection terminals of a Tektronix Type 514D oscilloscope. The latter was equipped with a blue-fluorescing screen (Type P7) permitting photographic registration of the trace even at high sweep speeds. The multiplier tube was furnished with a cathode follower which reduced its response time to < 1 μsec. The sweep speeds of the oscillograph were checked using a Tektronix Time-Mark Generator, Type 180. Errors exceeding 1 % were not observed, and no corrections were applied. The oscilloscope was used with signal triggering, the photomultiplier signal automatically starting the sweep.

Our first measurements were made with flashes from a Philips stroboscope GM 5 500*. As only single flashes of moderate intensity were required, the stroboscope was later replaced by a simple electronic device built according to a description by de Bruin [6], using the same kind of argon-filled flash tube (Type 57 900 P/06) and the same relay valve (thyratron PL5) as in the Philips stroboscope. The condenser had a capacity of 4 μF and was charged to 700 V. Care was taken to use short and suitably designed leads to reduce the time of the flash. By direct observation of the flash by means of the multiplier-oscilloscope combination (using suitable light filters for preventing damage to the multiplier tube) it was found that the peak in light intensity occurred 4 μsec after flash initiation and that after 12 μsec the decrease in intensity followed an exponential curve with a half-time of 2.6 μsec. These data represent a marked improvement compared to the flash used previously and considerably extended the range of fluorescence decay rates that could be measured.

The procedure used in photographing a decay curve was as follows. With the fluorescence cell brought to the desired temperature and placed in position, the voltage of the photomultiplier tube, the sweep speed, and the intensity of the cathode ray were adjusted by the aid of trial flashes so as to give a satisfactory trace. The electron beam was displaced a sufficient distance for registration to begin at least 12 μsec after flash initiation. The camera was then placed in position, the shutter opened, and another flash produced. The photograph was enlarged by projection and analyzed. The decay curves were found to be strictly exponential. Usually four decay curves were registered for each solution. The mean life values calculated from these curves usually did not differ by more than 1 %, and there was no trend in the values, showing that the solutions were not changed by the exciting flashes **.

Because of the very strong quenching action of oxygen, all fluorescence measurements had to be made in the absence of air and on solutions that had been carefully freed from dissolved oxygen. The fluorescence cell with arrangements for degassing the solution is shown in Fig. 2. The cell itself (*a*) was a cylindrical flow-through absorptiometer cell from The Tintometer Ltd., Salisbury, made of glass with negligible fluorescence. For degassing a solution, the apparatus, in an inclined position and with the solution in bulb *b*, was connected to a vacuum system by means of ground-glass joint *f*. The volume of the bulb was about 110 ml, that of the cell 40 ml. The pump used for evacuation was a two-stage rotary oil pump, capable of giving a vacuum of 10^{-4} mm. Pressure readings were made on a McLeod gauge. After cooling the bulb with carbon dioxide ice and alcohol the stop-cock was opened and the air removed by pumping. With the stop-cock closed, the solution was then warmed to 20°C to liberate dissolved air. By repeating these operations four times, the air pressure in the vessel was reduced to < 0.01 mm. After bringing the solution to 20°C, it was transferred to the fluorescence cell by tilting the apparatus, and the fluorescence decay rate was measured as described.

* Kindly placed at our disposal by Professor S. Lundberg of the Department of Mechanical Engineering.

** Prolonged irradiation may lead to measurable changes in the composition of the solution. *Cf.* p. 830.

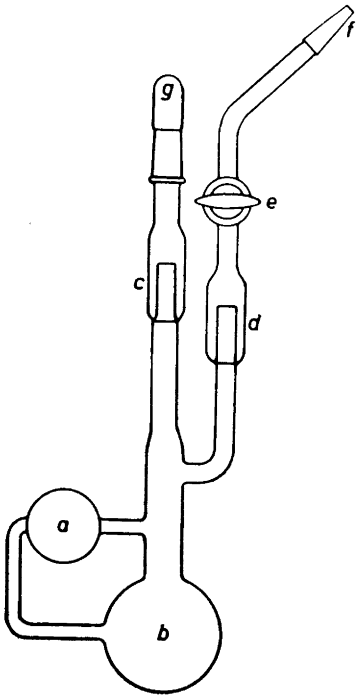

Fig. 2. Fluorescence cell with arrangements for degassing the solution. (a) Cylindrical fluorescence cell. (b) Spherical glass bulb. (c) and (d) Pockets for trapping stop-cock grease. (e) Stop-cock. (f) Ground glass joint. (g) Cap with ground glass joint.

When studying the quenching action of oxygen, known small quantities of air were admitted into the apparatus above the frozen and degassed biacetyl solution. For this purpose a special gas burette was used, made of 2 mm manometer tubing, where volumes were measured under reduced pressure. As little as 10^{-6} mole of oxygen could be measured with an accuracy of 1 %. After adjusting the temperature to 20°C, the solution was shaken to attain equilibrium. Knowing the volume of the apparatus (188.5 ml), the volume of the solution (44.0 ml), and the solubility coefficient, the concentration of oxygen in the solution could be calculated.

Materials

The chemicals used were of the highest purity obtainable commercially and were further purified as indicated below.

Biacetyl was fractionally distilled in a nitrogen atmosphere under reduced pressure (100 mm), using a column corresponding to 15 theoretical plates. The same column was used for all other distillations. The purified biacetyl was stored in the dark. Its fluorescence properties remained unchanged for months.

Benzyl alcohol, *aniline*, and *nitrobenzene* were distilled at 9—12 mm, the following at NP: *benzene*, *carbon tetrachloride*, *perchloroethylene*, cyclo*hexene*, *methanol*, and iso*propanol*, the latter in a nitrogen atmosphere. *Stilbene* and *1,3,5-trinitrobenzene* were recrystallized from ethanol, p-*chlorobenzaldehyde* from a water-ethanol mixture, and *resorcinol* from benzene. *Triphenylamine* in benzene solution was repeatedly shaken with 5 M sulfuric acid to remove diphenylamine. It was then recrystallized from an ethanol-water mixture. *Naphthalene*, *phenanthrene*, *pyrene*, and *chrysene* were freed from anthracene by treatment with maleic anhydride in benzene or toluene solution [7,8]. The first three were then recrystallized from ethanol. Chrysene was refluxed with carbon tetrachloride containing benzoyl peroxide [7] and recrystallized once from acetone and twice from benzene.

Phenol, *hydroquinone*, *diphenylamine*, m-*dinitrobenzene*, *anthracene*, *benzpyrene*, and *1,2-benzanthracene* were used without further purification.

RESULTS AND DISCUSSION

The solvent found most suitable for our purpose was benzene. Dilute solutions of biacetyl in high quality benzene from different sources gave strongly varying values of fluorescence mean life (τ). However, by fractional distillation of the benzene we generally succeeded in raising the value of τ to about 0.98×10^{-3} sec at 20°C. The highest value observed was 1.03×10^{-3} sec. For biacetyl vapour at 25°C a value of 1.80×10^{-3} sec has been reported [9], as against 2.25×10^{-3} sec for a solid solution at 77°K[10].

Solutions of biacetyl showed the phenomenon of self-quenching, the value of τ decreasing with increasing biacetyl concentration. However, the effect was slight and variable, indicating that it was due to remaining traces of impurities in the biacetyl. It was found to obey the Stern-Volmer quenching formula [11], in that τ could be represented as a function of biacetyl concentration (C) by the equation:

$$\frac{1}{\tau_0} = \frac{1}{\tau} + kC \tag{1}$$

The lowest value observed for k was 460 l mole^{-1} sec^{-1}. In studying quenching by foreign substances, the biacetyl concentration was kept so low that self-quenching was negligible.

Other liquids tried as solvents gave the following values of τ in μsec: carbon tetrachloride 784, chlorobenzene 447, anisole 307, methyl benzoate 278, water 229.

Stronger quenchers were studied in benzene solution. The results were found to obey the Stern-Volmer formula (1). In all cases the decay rate was measured at six different concentrations of the quencher such that τ varied between τ_0 and $\tau_0/10$. For anthracene a determination giving $\tau = \tau_0/40$ also gave good agreement with eqn. (1). The straight line relation between $1/\tau$ and C had a standard error in regression coefficients of 1—2 %. Table 1 gives the calculated values of k in l mole^{-1} sec^{-1}. The oxygen concentration in benzene solution was calculated using the solubility value given by Horiuti [12].

A closer study of the table leads to the conclusion, that substances with pronounced quenching action may be divided into two classes:

1. In the first class, comprising *i.a.* phenols, amines, and alcohols, quenching power is connected with the presence in the molecule of a loosely bound hydrogen atom. This is indicated by the almost complete loss of quenching power in going from phenol to anisol and from diphenylamine to triphenylamine. Also the general parallelism between quenching power and inhibitory action in autoxidation reactions, which is apparent, points in the same direction. It is interesting to note in this connection that the only aldehyde investigated, *p*-chlorobenzaldehyde, is a stronger quencher than the alcohols, that act as weak inhibitors (sometimes called retarders) of aldehyde oxidation. On the other hand, strong oxidation inhibitors like phenols and primary and secondary amines have quenching constants that exceed the value for the aldehyde by several powers of ten.

There can be little doubt that the quenching mechanism indicated by these results may be identified with a type of chemical reaction which is well-known

Table 1. Quenching constants (l mole^{-1} sec^{-1}) in benzene solution at 20°C.

Methanol	2.6×10^2
*Iso*propanol	2.7×10^3
Benzyl alcohol	6.9×10^3
p-Chlorobenzaldehyde	2.4×10^4
Phenol	8.9×10^7
Resorcinol	2.7×10^8
Hydroquinone	5.3×10^9
Aniline	1.8×10^9
Diphenylamine	6.8×10^9
Triphenylamine	3.9×10^4
Perchloroethylene	3.5×10^4
*Cyclo*hexene	1.0×10^5
Nitrobenzene	4.4×10^4
m-Dinitrobenzene	3.6×10^5
1,3,5-Trinitrobenzene	1.1×10^6
Stilbene	4.4×10^9
Naphthalene	3.8×10^3
Phenanthrene	2.3×10^3
Anthracene	8.1×10^9
Chrysene	2.4×10^8
Pyrene	7.5×10^9
Benzpyrene	8.2×10^9
1,2-Benzanthracene	3.8×10^9
Oxygen	5.1×10^9

from the photochemistry of carbonyl compounds. In the words of Plotnikow [13]: "Die Verbindungen, die die CO-Gruppe enthalten, besitzen die Eigenschaft, im Licht anderen organischen Körpern den Wasserstoff zu entziehen (sie zu dehydrieren) und ihn an diese CO-Gruppe anzulagern: $-C{=}O + H \rightarrow -C(OH)-$. Die Doppelbindung wird somit aufgehoben und eine Bindung frei gemacht. Dadurch wird der Verbindung die Möglichkeit gegeben, sich entweder zu kondensieren oder andere Moleküle anzugliedern." An example is the formation of benzopinacol, $(C_6H_5)_2C(OH)C(OH)(C_6H_5)_2$, and acetone when solutions of benzophenone in *iso*propanol are irradiated with ultraviolet light. It was suggested long ago [14,15] that an intermediate in this reaction is a biradical $(C_6H_5)_2\dot{C}-O\cdot$, formed from benzophenone as a result of light absorption, which due to its unpaired electron on the oxygen atom has the power of abstracting a loosely bound hydrogen atom from a neighbouring molecule. This biradical may be identified with the triplet state responsible for the phosphorescence of benzophenone in solid solution at low temperatures *.

Similarly biacetyl, when irradiated in ethanol solution [16], gives acetaldehyde and 3,4-dimethyl-hexanediol-(3,4)-dione-(2,5) (I).

I

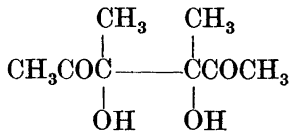

II

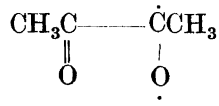

* For a discussion of this point, see Bäckström, H. L. J., Steneryr, A. and Perlmann, P. *This Journal* **12** (1958) 8.

Thus the biradical of biacetyl reacts as if it had the structure II. Obviously, however, the true state of this biradical must be largely determined by the exceptional possibilities for resonance. Probably the resulting resonance stabilization is the cause of its remarkable stability.

2. The second class of quenchers consists of unsaturated and aromatic compounds. In view of the biradical nature of the triplet state it is of interest that these compounds are known to undergo addition reactions with free radicals. This is particularly the case with the polynuclear hydrocarbons, and a general parallelism between the quenching constants and the "relative methyl affinities" of Szwarc [17] seems to exist where comparison can be made. In the series of aromatic nitro compounds, increase in quenching constant parallels the tendency to undergo radical addition reactions.

Probably, however, we are here dealing with a quenching mechanism which is physical rather than chemical in nature. Terenin and Ermolaev [18] have shown that sensitized phosphorescence may take place in solid solutions at low temperatures. For instance, when a solution of naphthalene in ethanol at −195°C is excited by filtered radiation of wavelength 3 660 Å no luminescence is observed, since the onset of the absorption spectrum of naphthalene lies at 3 270 Å. However, when the solution contains, in addition, a suitable sensitizer like benzophenone, which absorbs at 3 660 Å, a bright phosphorescent emission of the triplet spectrum of naphthalene in the visible appears. By measuring intensities and decay times of the emission spectra as a function of the concentrations the authors were able to prove that the process taking place is a transfer of excitation energy, causing a triplet → singlet transition in the sensitizer and the reverse transition in the acceptor. The necessary condition is that the energy level of the triplet state of the sensitizer must lie above that of the acceptor.

The same process of energy transfer may be expected to take place in liquid solutions at ordinary temperatures. The approximate triplet state energy (E_T) of biacetyl as determined from its phosphorescence spectrum [1] is 56 kcal/mole, taking the energy of the ground state as zero. Table 2 gives the corresponding values for quenchers of class 2 where such data are available *. It will be seen that E_T-values below 56 kcal/mole correspond to high values of the quenching constant, those well above 56 kcal/mole to low values. Chrysene with $E_T = 57$ kcal/mole occupies an intermediate position.

In liquid solution at ordinary temperature, excitation of the acceptor to the triplet state will not normally result in sensitized phosphorescence. Molecules in this state will be deactivated by collisions before they have time to radiate. The only visible effect in the present case will therefore be the quenching of biacetyl fluorescence. The possibility exists, however, that the triplet excited quencher molecules may undergo some sufficiently rapid chemical reaction. This is how we interpret the sensitized formation of dianthracene described on p. 830.

Oxygen as a quencher represents a case by itself. It has long been known that oxygen reacts with biacetyl under the influence of light [20] but nothing

* According to Kasha and McGlynn[5], the value for stilbene given by Lewis and Kasha [1] is now known to be wrong.

Table 2. The relation between quenching constant and triplet state energy for some quenchers of class 2.

	log k	E_T kcal/mole	Ref.
Phenanthrene	3.4	62	19
Naphthalene	3.6	61	1
Nitrobenzene	4.6	60	1
Chrysene	8.4	57	19
Pyrene	9.9	48	19
1,2-Benzanthracene	9.6	47	19
Anthracene	9.9	42	1

is known about the reaction products. Since one of the carbon atoms of the biradical has an unpaired electron, the primary act is probably the addition of an oxygen molecule to this carbon atom.

In cases where the rate of a bimolecular reaction in solution is determined entirely by the rate of diffusion of the reactants towards each other, the value of the rate constant may be estimated by a formula given by Debye [21]. For benzene solutions at 20°C the calculated value is 1.0×10^{10} l mole^{-1} sec^{-1}. It will be seen that the values of k for the strongest quenchers closely approach this value, showing that in these cases the quenching process is so rapid as to be essentially diffusion controlled [22].

As regards the weaker quenchers in Table 1, special methods of purification were employed for removing as far as possible traces of chemically related substances with strong quenching action. As always, the purification process was followed by measuring the quenching constant. For instance, the k-value found for unpurified phenanthrene was 2.5×10^6. Two purifications by the method described above (p.826) reduced the value to 7×10^3, and four to the value given in the table (2.3×10^3). Presumably this is not far from the true value but provisionally it must be regarded as a maximum. The same applies to the k-values for other weak quenchers.

PRELIMINARY RESULTS OF PHOTOCHEMICAL EXPERIMENTS WITH ANTHRACENE

A degassed solution of 0.41 g of biacetyl and 0.42 g of anthracene in 50 ml of purified benzene, contained in an evacuated and sealed glass bulb, was exposed to daylight near a south window. In order to exclude wavelengths absorbed by anthracene, the bulb was immersed in a beaker with 1 M sodium nitrite solution. After about 2 weeks colourless crystals began to appear. After 9 months the bulb was opened and the crystals formed were washed with alcohol and dried. A microanalysis gave: C 93.97; H 5.71. Calc. for dianthracene: C 94.34; H 5.66.

The absorption spectrum in ethanol solution showed substantial agreement with that of dianthracene [23] but indicated that the product contained about 5 mole % of anthracene.

Confirmatory evidence for the photosensitized formation of dianthracene was obtained from similar experiments using light from a mercury arc, filtered to remove wavelengths absorbed by anthracene. The initial concentration of anthracene was lower (10^{-4} — 10^{-5} mole/l) and its rate of disappearance from the solution was followed by observation of biacetyl fluorescene and by measuring its decay rate when the anthracene concentration had decreased sufficiently for such measurements to the possible. The τ-values finally reached on prolonged irradiation were close to τ_0, showing that the reaction product had no noticeable quenching action. In order to prove that the disappearance of the anthracene was not, in spite of all precautions, caused by light absorbed by that substance, a degassed solution containing the same amount of anthracene but no biacetyl was irradiated twice the time used in the foregoing experiment. After opening the bulb, adding biacetyl, and degassing the solution, it was found that the fluorescence of biacetyl was completely quenched by the anthracene still present.

In the experiments described, the quantum efficiency of the photosensitized reaction of anthracene was determined using the potassium ferrioxalate actinometer of Parker [24]. The values obtained ranged from 0.1 to 1.9 %. They increased with increasing light intensity, but apparently also other factors such as the concentration of biacetyl are of importance.

The reaction product formed slowly decomposes again at room temperature. This is shown by the fact that when the solution is kept in the dark, τ again decreases. From the rate of decrease in τ, the rate of decomposition of dianthracene could be calculated. It corresponded to a half-life of about 1 400 days.

REFERENCES

1. Lewis, G. N. and Kasha, M. *J. Am. Chem. Soc.* **66** (1944) 2100; Lewis, G. N., Lipkin, D. and Magel, Th. T. *Ibid.* **63** (1941) 3005; *cf.* also: Terenin, A. N. *Acta Physicochim. U.R.S.S.* **18** (1943) 210.
2. Lewis, G. N. and Kasha, M. *J. Am. Chem. Soc.* **67** (1945) 994.
3. A very complete list of references is to be found in Sheats, G. F. and Noyes, Jr., W. A. *Ibid.* **77** (1955) 1421.
4. Preliminary communication: Bäckström, H. L. J. and Sandros, K. *J. Chem. Phys.* **23** (1955) 2197.
5. Reid, C. *Excited States in Chemistry and Biology*, Butterworths Scientific Publications, London, 1957; Kasha, M. and McGlynn, S. P. *Ann. Rev. of Phys. Chem.* **7** (1956) 403.
6. de Bruin, S. L. *Philips Tech. Rev.* **8** (1946) 25.
7. Kooyman, E. C. and Fahrenhorst, E. *Trans. Faraday Soc.* **49** (1953) 58.
8. Marvel, C. S. and Anderson, W. S. *J. Am. Chem. Soc.* **76** (1954) 5435.
9. Kaskan, W. E. and Duncan, A. B. F. *J. Chem. Phys.* **18** (1950) 427.
10. McClure, D. S. *J. Chem. Phys.* **17** (1949) 905.
11. Förster, Th. *Fluoreszenz organischer Verbindungen*, Vandenhoeck & Ruprecht, Göttingen, 1951, p. 209.
12. Horiuti, J. *Sci. Papers, Inst. Phys. Chem. Research (Tokio)* **17** (1931) No. 341, 214.
13. Plotnikow, J. *Allgemeine Photochemie*, Vereinigung Wiss. Verleger, Berlin, 1920, p. 607.
14. Bäckström, H. L. J. *Z. physik. Chem.* **B25** (1934) 99.
15. Hirschberg, Y. and Farkas, L. *J. Am. Chem. Soc.* **59** (1937) 2453.
16. Cohen, W. D. *Chem. Weekblad* **13** (1916) 590.

17. Levy, M. and Szwarc, M. *J. Am. Chem. Soc.* **77** (1955) 1949.
18. Terenin, A. N. and Ermolaev, V. L. *Trans. Faraday Soc.* **52** (1956) 1042.
19. McClure, D. S. *J. Chem. Phys.* **17** (1949) 905.
20. Almy, G. M., Fuller, H. Q. and Kinzer, G. D. *Phys. Rev.* **55** (1939) 238.
21. Debye, P. *Trans. Electrochem. Soc.* **82** (1942) 265.
22. *Cf.* Christiansen, J. A. *J. Colloid Sci.* **6** (1951) 213.
23. Coulson, C. A., Orgel, L. E., Taylor, W. and Weiss, J. *J. Chem. Soc.* **1955** 2961.
24. Parker, C. A. *Proc. Roy. Soc. London* **A220** (1953) 104; Hatchard, C. G. and Parker, C. A. *Ibid.* **A235** (1956) 518.

Received February 19, 1958.