# A Note on the Tritiation of Organic Compounds in Tritium Gas

SUNE BERGSTRÖM and SVEN LINDSTEDT

*Department of Physiological Chemistry, University of Lund, Lund, Sweden*

It was recently found by Wilzbach [1] that an exchange reaction occurs when organic compounds are exposed to tritium gas, resulting in the incorporation of tritium into stable positions. This important observation thus makes tritium labelled compounds easily available for purposes when a specific labelling is not required.

This communication describes a simple glass apparatus shown in Fig. 1 that we have used to carry out the tritiation on a milligram-scale. It was constructed from 8 mm Pyrex tubing except for the parts drawn with heavy lines in the figure which were made from 1 mm capillary tubing. At A the line was connected to a mercury diffusion pump through a ball joint. The tritium ampoule was connected at B. The substance to be exposed was put into a small glasstube which holds about 10 mg of material covered with a small plug of glass wool. Six of these tubes were placed in the reaction vessel (shown in scale), which was then connected at C. By this arrangement several substances can conveniently be exposed simultaneously.

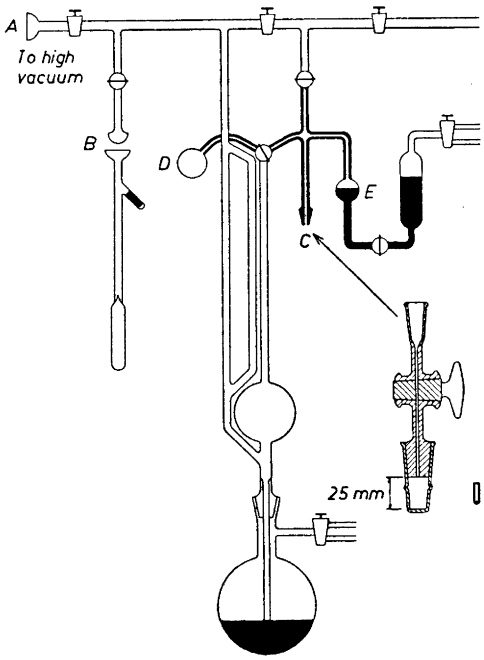


*Fig. 1.*

When the apparatus has been evacuated, the tritium is pumped into the reaction vessel with the Toepler pump. The pump is calibrated for volume measurements (10 $\mu$l—2 ml). After the desired time of exposure the Toepler pump is used to transfer the tritium gas to the glass bulb D (10 ml) where it is kept for further use.

As the apparatus is also used to carry out catalytic hydrogenations with tritium, it includes a device to alter the capacity of the reaction space, by varying the volume of the bulb E.

This apparatus has been used to label a large number of different compounds. As an example the labelling of cholic acid will be described. Six tubes loaded with 5 mg of crystalline cholic acid in each were kept for different times in 1 Curie of tritium gas (~80 % pure) at a pressure of approximately 100 mm Hg. The cholic acid was then purified by chromatography [2]. After 36 h the cholic acid had a specific activity of ~7 $\mu$C per mg that increased to ~3.2 mC per mg after 28 days. Less than 5 % of decomposition products had been formed.

The possibility of utilizing these high activities for analytical purposes is being investigated.

| Time of exposure Days | Total activity in cholic acid sample (5 mg) c.p.m. $\times 10^{-6}$ plated in infinit thinness and measured in gas flow chamber |
|---|---|
| 1.5 | 28 |
| 3 | 73 |
| 5 | 223 |
| 9 | 512 |
| 16 | 2 200 |
| 28 | 12 000 |

1. Wilzbach, K. E. *Chem. Eng. News* **34** (1956) 4616; *J. Am. Chem. Soc.* **79** (1957) 1013.
2. Norman, A. *Acta Chem. Scand.* **7** (1953) 1413.

Received August 6, 1957.